MEC SERIES ELECTRIC CHAIN HOIST

USER (OPERATION) MANUAL

INSTRUCTION MANUAL

WARNING

This equipment should not be installed, operated or maintained by any person who has not read and understood all the contents of this manual. Failure to read and comply with the contents of this manual can result in serious body injury or death, and property damage.

Contents

1、Mark Definition

MEC series electric chain hoist was designed to apply in normal work condition, lifting load in vertical direction, it cannot lift mankind.

The manual use the below mark to authenticate the lever and grade of danger.

⚠ DANGER Very dangerous status, if it is inevitable, it will lead to human being injury or serious human being wounded and property loss.

⚠ WARNING Potential dangerous status, if it is inevitable, it may lead to human being injury or serious human being wounded and property loss.

⚠ CAUTION Potential dangerous status, if it is inevitable, it may lead to human being injury or serious human being wounded and property loss.

According to the operating situation, **Caution Mark** would lead to series human being injury also, hence, whatever mark you meet, the safe operation is the most important, and you should put the manual in the place where the operator could use conveniently as reference.

2 FORBIDDEN PRINCIPAL

2.1 General Rules

Wrong use or forget to maintain the hoist, it may lead to dangerous situation. For example, the dangerous situation as lifting load cannot land on the ground. Before installing, operating or maintaining, please read all the text of the manual and conform the principal of safety and operating instruction.

We will not be responsible for the problem which was due to wrong use. If the products was used in non-standard application, please negotiate with the local distributor in advance.

⚠ DANGER

Hoist cannot transfer Human being or use as Supporting mechanism

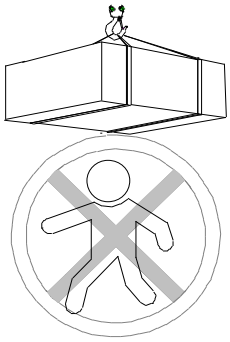

don't pass through the beneath side of lifting weight, Also, don't move the lifting weight to the up side of human Being.

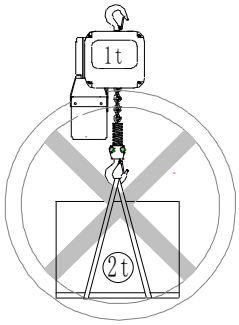

Lifting weight cannot over the rated lifting capacity

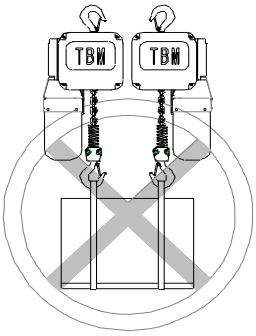

Forbidden to use multi pieces of hoists to lift which was over the Rated capacity of the single hoist.

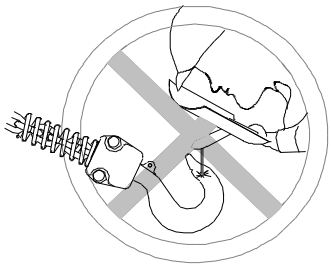

Forbidden to weld the hook and the lifting chain

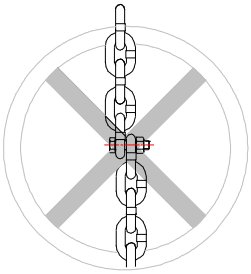

Do not use bolt, screw, screw driver etc. to knot or shorten the Lifting chain.

Caution: Before you move the weight, please warn all the human being to be careful in the nearby zone, if it is necessary, please set lifting special operating area, only operator could enter in this zone. The person, who has not known all the text of the manual and the warning mark, cannot operate the hoist.

2.2 Preoperational Check

⚠ CAUTION This manual was formulated for hoist operator. Before operator start to work, he Should know all the contents of safety and operation instruction.

⚠ WARNING If the products has deformation of crack problem on the hook, please do not Use, you should contact the seller or our company to change the new parts. Please Do not change the parts which are not supplied by our distributor or our company.

⚠ WARNING Forbidden to repair the lifting chain which was installed in the hoist

⚠ CAUTION Before loading, Please fill 0.7 Kg L-CKD-100 close type gear oil into the reducer.

⚠ CAUTION Electric hoist must be used when the power cable connects the reliable ground wire.

⚠ CAUTION Please do not use the hoist when the lifting chain twist, knot and the hook is not in the correct position.

⚠ CAUTION Before operation, please ensure to carry out all the contents of item inspecting Classification.

⚠ CAUTION Assess the weight of the lifting goods, select the hoist which is suitable for your Application and capacity.

⚠ CAUTION Check the top hook shaft and bottom hook, ensure that there is no deformation and loose

⚠ CAUTION Check the limit switch manually, to conform that is normal.

⚠ CAUTION Load chain was made by special alloy steel, cannot weld or refit.

⚠ CAUTION Make sure the brake system has no ice when the temperature is below 0℃.

2.3 Operation Caution

⚠WARNING

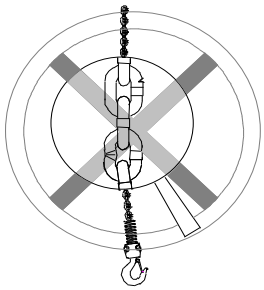

Forbidden to use the hoist which has deformation or crack in Lifting chain

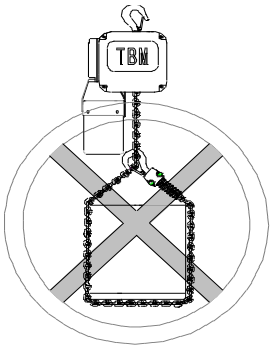

Do not use lifting chain as heavy duty rigging

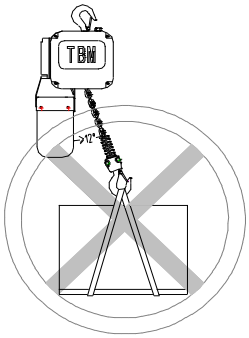

Do not lift the goods slant the angle ＞12° than vertical direction

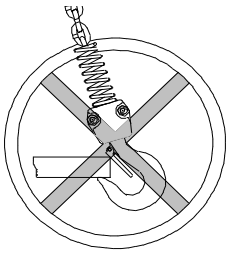

Can't hang the weight directly on the hook tip.

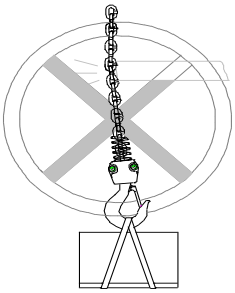

Do not let the lifting chain pass through the obstacle surface such as steel plate

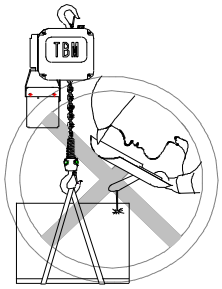

Forbidden to do welding or cutting operation when the weight was lifted in the air.

⚠WARNING Don't wave the lifting goods.

⚠WARNING Don't use hoist which was broken or with abnormal sound

⚠WARNING Don't do repeat operation of quick up and down when lifting the goods.

⚠WARNING Forbidden to put the weight in the air without supervisor in long time.

⚠WARNING Please assure the load is in hook cavity correctly.

⚠CAUTION Before lifting the weight, must assure to eliminate the lifting chain clearance, in order to avoid the occurrence of impacting load.

2.4 Operation Finished

⚠CAUTION After operation, please make sure the weight is land on the ground safety to avoid the goods drop.

⚠WARNING When the operation finished, cut off the control pendant in order to avoid wrong operations by others.

2.5 Inspection and Maintenance

⚠CAUTION Assure special inspect and maintain the hoist regularly according to the rules in Chapter 4 and chapter 5, otherwise, please contact our distributor or our company to make sure the inspect and maintain item.

⚠WARNING The load chain was made by special alloy steel, do not weld or refit.

2.6 Other Items

⚠CAUTION If you want to use the hoist in special condition (such as salt water, sea water, acid Material,alkalinity material, explosive environment).Please contact our distributor or our company to confirm.

⚠WARNING Forbidden to use the hoist which has problem or need to be maintained.

⚠WARNING The brake disc need to be adjusted after half year.

3 Technical Data

3.1 Operation Condition and Environment

Temperature range：-20℃～+40℃，If you need hoist work in extreme environment, please consult the distributor or our company.

Relative humidity： ≤85%，this product was not under-water operating product；

Altitude height： ≤1000m；

It is not suitable to use in condition where fire disaster, explosion risk or corrosive gas has, also it can

Not lifting melted steel and poisonous, inflammable, explosive goods.

3.2 Technical Parameter

1）Hoist Technical Parameter

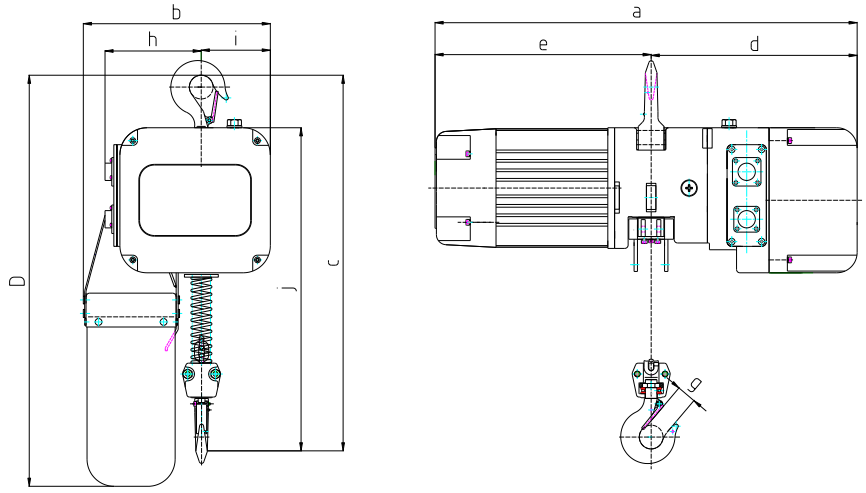

Table 1 MEC Series Technical Parameters

Type			MEC-A-0.3	MEC-A-0.5	MEC-A-1.0	MEC-A-2	MEC-A-3	MEC-A-5	MEC-A-7.5
Capacity (t)			0.25	0.5	1	2	3	5	7.5
Lifting speed (m/min)			7/2.3	7.6/2.5	5/1.7	2.5/0.85	6/2	3/1	2/0.6
Classification			M5	M5	M5	M5	M5	M5	M4
Lifting power (kw)			0.9/0.3	0.9/0.3	1.1/0.37	1.1/0.37	3/1	3/1	3/1
Duty Rating (jc %)			50	40	40	30	30	30	30
Standard lifting height (m)			3	3	3	3	3	3	3
Chain size Chain Fall			Φ5x15 1	Φ6.3x19 1	Φ8x24 1	Φ8x24 2	Φ11.2x34 1	Φ11.2x34 2	Φ11.2x34 3
Tested Load (Kg)			275	550	1100	2200	3300	5500	8250
The weight for lifting height add per meter			0.54	0.85	1.4	2.8	2.7	5.4	8.1
Main	C		490	495	530	650	595	860	900
	D		610	610	630	780	780	870	790
	a	Single speed	592	592	592	592	694	694	694
		Double speed	592	636	656	656	807	807	807
		Inverter	626	626	626	626	694	694	694

Dimension	b		276	276	276	276	430	430	575
	d	Single speed	273	273	273	273	336	336	336
		Double speed	273	307	307	307	336	336	336
		Inverter	317	317	317	317	336	336	336
	e	Single speed	319	319	319	319	358	358	358
		Double speed	319	329	349	349	471	471	471
		Inverter	319	319	319	319	358	358	358
	g		26	26	31	38	38	50	58
	h		142	142	142	185	185	240	283
	i		102	102	102	165	165	110	191
	j		415	420	430	482	487	665	902

*Due to the products constantly updated, the above parameters are subject to change without prior notice.

Table 2 MEC Series Electrical Parameter List

TYPE	Power Voltage（V）	Control Pendant Voltage（V）	Frequency（Hz）	Ampere without Load（A）	Ampere with Load（A）	Electric motor with Load Unration rate（%）	Electrical machinery connected number Each hour（n）
MEC-2-0.25	380v/3p	24	50	2.25	3	40	240
MEC-2-0.5	380v/3p	24	50	2.25	3	40	240
MEC-2-1.0（0.9）	380v/3p	24	50	4.5	5	40	240
MEC-2-2	380v/3p	24	50	5	6.5	40	240
MEC-3-3	380v/3p	24	50	5	6.5	40	240
MEC-3-5	380v/3p	24	50	5	6.5	40	240
MEC-3-7.5	380v/3p	24	50	5	6.5	30	180

2）MEC Series Hoist with trolley Technical Parameters

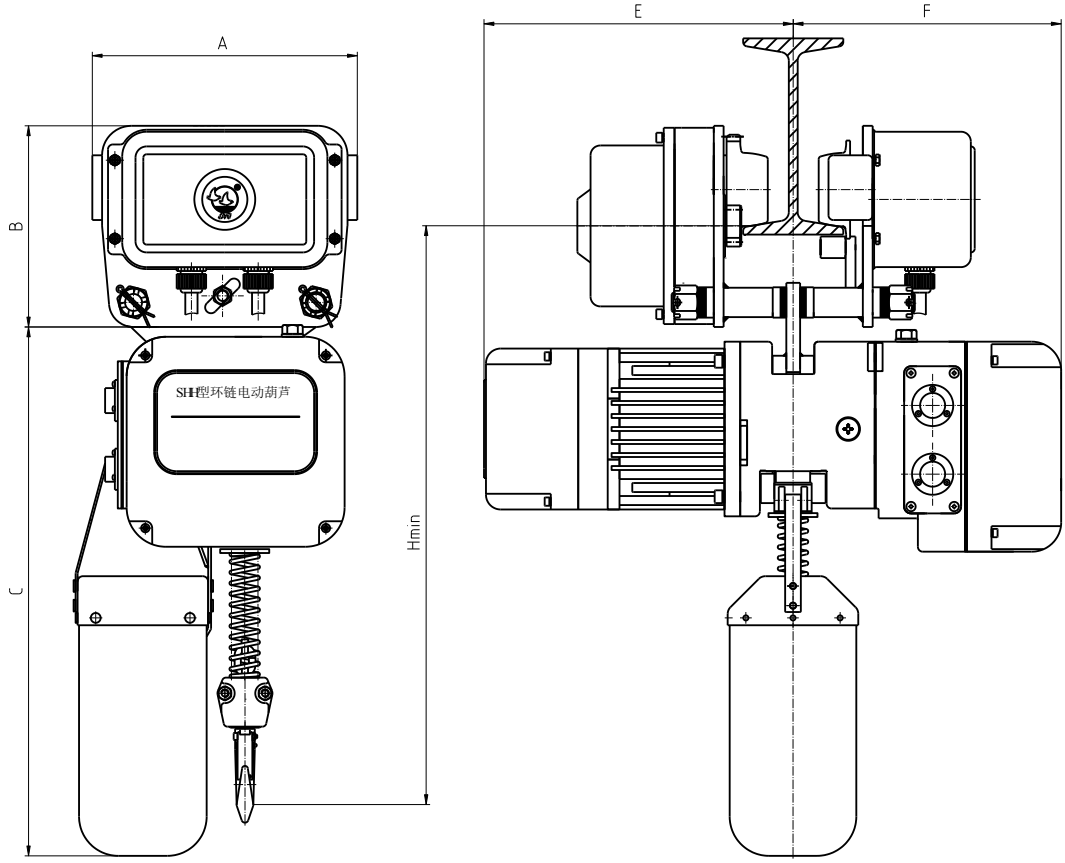

Table 3 MEC series with trolley Technical Parameters

TYPE			MEC-AM-0.3	MEC-AM-0.5	MEC-AM-1.0	MEC-AM-2	MEC-AM-3	MEC-AM-5	MEC-AM-7.5
Capacity (t)			0.25	0.5	1	2	3	5	7.5
Travelling speed (m/min)			15	15	15	15	18	12	10
Travelling power (kw)			0.3	0.3	0.3	0.3	0.4	0.4	0.75
Working Efficiency (%)			40	40	40	40	40	40	40
Beam Width Range (mm)			74～124	74～124	74～124	74～124	102～152	102～152	150～220
Main size (mm)	A		270	270	270	270	330	334	528
	B		205	205	205	205	252	252	325
	C		590	590	610	770	770	850	736
	Hmin		540	540	550	695	660	880	1035
	E	Single speed	319	319	319	319	358	358	358
		Double speed	319	329	349	349	471	471	471
		Inverter	319	319	319	319	358	358	358

	F	Single speed	273	273	273	273	336	336	336
		Double speed	273	307	307	307	336	336	336
		Inverter	317	317	317	317	336	336	336

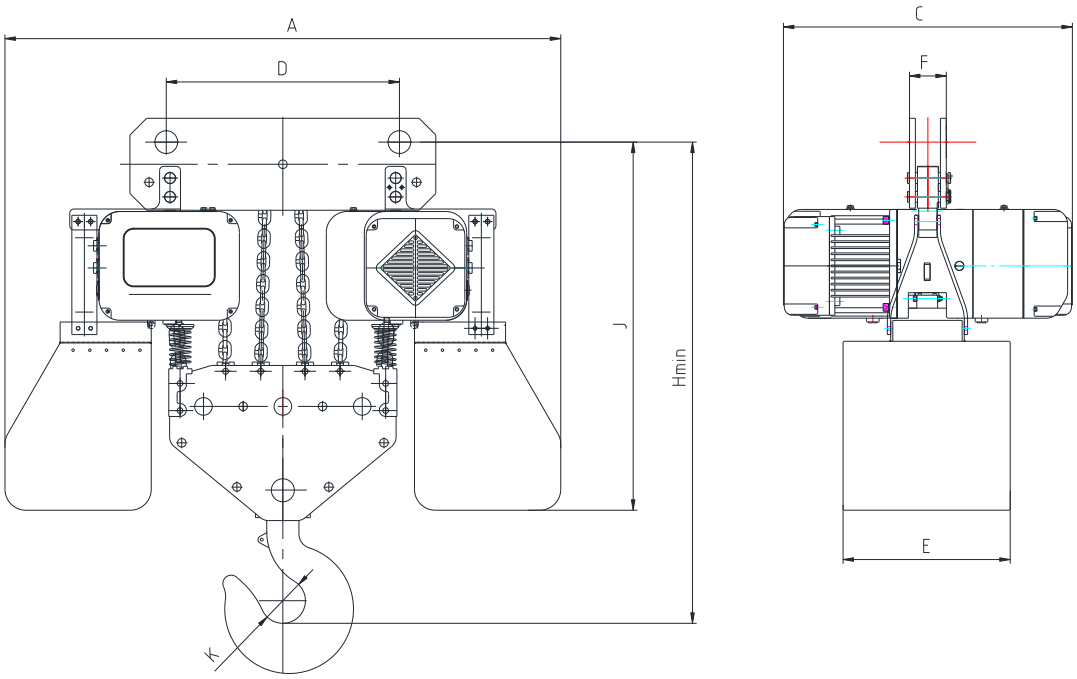

3）MEC Series Big capacity Technical Parameters

TYPE			MEC-A-10	MEC-A-15	MEC-A-20	MEC-A-25	MEC-A-32
Capacity (t)			10	15	20	25	32
Lifting speed(m/min)			3/1	2/0.67	1.5/0.5	1.2/0.4	1/0.33
Classification			M4	M4	M4	M4	M4
Motor power (kw)			2-3/1	2-3/1	2-3/1	2-3/1	2-3/1
Duty Rating (jc %)			30	30	30	30	30
Lifting height(m)			3	3	3	3	3
Lifting chain size Chain Fall			Φ11.2x34 4	Φ11.2x34 6	Φ11.2x34 8	Φ11.2x34 10	Φ11.2x34 12
Tested Load (Kg)			11	16.5	22	27.5	35.2
The Weight for lifting height add per meter (kg)			21.6	32.4	43.2	45	54
Main	Hmin		1300	1180	1210	1230	1260
	A		950	1330	1500	1700	1900
	C	Single speed	720	720	720	720	720
		Double speed	950	950	950	950	950
	D			560	740	930	570

Size	E	400	400	400	450	450
	F	88	88	88	88	88
	J	1080	900	930	1060	1090
	K	65	80	80	100	100

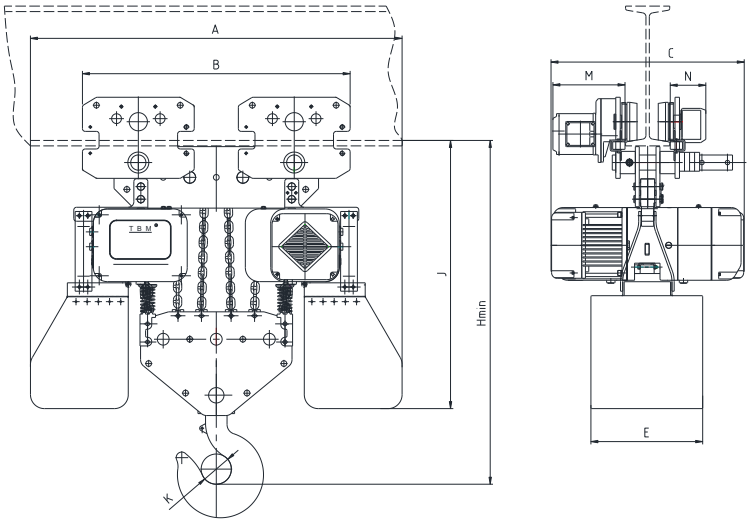

TYPE			MEC-AM-1000		MEC-AM-1500		MEC-AM-2000		MEC-AM-2500		MEC-AM-3200	
Capacity (t)			10		15		20		25		32	
Travelling speed(m/min)			11	21	11	21	11	21	11	21	11	21
Motor power (kw)			0.75		2-0.75		2-0.75		2-0.75		3-0.75	
Beam width range(mm)			150-220		150-220		150-220		150-220		150-220	
Main Size	Hmin		1100		1250		1300		1380		1410	
	A		1160		1330		1500		1700		1900	
	B		500		958		1120		1300		1300	
	C	Single speed	720		720		720		720		720	
		Double speed	950		950		950		950		950	
	E		400		400		400		450		450	
	J		977		970		1000		1210		1240	
	M		265		265		265		265		265	
	N		190		190		190		190		265	
	K		65		108		108		145		145	

3）MEC Series Big capacity With Trolley Technical Parameters

NOTE：Before operation, ensure the hook shaft is in correct position, especially for double chain.

3.3 Main Characteristic

This hoist has overload limit mechanism, could avoid the bad effect due to overload；
Lifting hook has self-lock mechanism, it could prevent the rigging to slide；
The electric motor has thermal protector, when the motor temperature rise too high by over use, this mechanism would cut down the motor in order to protect the motor would not be burn out.
The hoist has hooked upper and down position limit mechanism.
The hoist has emergency stop button, could let the operator cut down the power when he is in dangerous situation.

3.4 Mechanical Classification and Service Life

You could protect the safety and service life of hoist only if you operate the equipment as demand grade.MASTERLIFT MEC Series Electric Chain Hoist is suitable for the classification 1AM and 2m of FEM rules (FEM9.511) as table 4, suitable for M4 and M5 of ISO rules (ISO4301) as table 4.From Table 4 to Table7, we know how to determine the grade. The average operation time and whole operation time determined by load situation

Table 4

TYPE	Capacity (t)	Classification	
		FEM	ISO
MEC-A-003	1/4	2m	M5
MEC-A-005	1/2	2m	M5
MEC-A-010	1	2m	M5
MEC-A-020	2	2m	M5
MEC-A-030	3	2m	M5
MEC-A-050	5	2m	M5
MEC-A-750	7.5	1Am	M4
MEC-A-1000	10	1Am	M4
MEC-A-1500	15	1Am	M4
MEC-A-2000	20	1Am	M4
MEC-A-2500	25	1Am	M4
MEC-A-3200	32	1Am	M4

Table 5
1Am (FEM)

Load Range	Definition	Average value	Daily use time（h）	Total use time（h）
1 (Light)	Usually in light load	K≤0.50	2-4	6300
2 (Middle)	Usually in light load, sometimes in heavy load	0.50＜k≤0.63	1-2	3200
3 (Heavy)	Usually in medium load, Sometimes in heavy load	0.63＜k≤0.80	0.5-1	1600
4 (Especially Heavy)	Usually in heavy load, Sometimes in max load	0.80＜k≤1.00	0.25-0.5	800

Table 6
2m (FEM)

Load Range	Definition	Average value	Daily use time（h）	Total use time（h）
1 (Light)	Usually in light load	K≤0.50	2-4	12500
2 (Middle)	Usually in light load, sometimes in heavy load	0.50＜k≤0.63	1-2	6300
3 (Heavy)	Usually in medium load, Sometimes in heavy load	0.63＜k≤0.80	0.5-1	3200
4 (Especially Heavy)	Usually in heavy load, Sometimes in max load	0.80＜k≤1.00	0.25-0.5	1600

Table 7
M4（ISO/JIS）

Load Range	Definition	Standard Load Parameter（km）	Daily use time（h）	Total use time（h）
1 (Light)	ISO：Usually in light load	0.125	—	6300/6400
	JIS：Usually in 1/3 of rated load，seldom in rated load	—	2-4	
2 (Middle)	ISO：Usually in light load, sometimes in heavy load	0.25	—	3200
	JIS：Usually in 1/3~2/3 rated load, sometimes in rated capacity	—	1-2	
3 (Heavy)	ISO：Usually in medium load, sometimes in heavy load	0.50	—	1600
	JIS：Usually in more than 2/3 rated capacity，always in rated load	—	0.5-1	
4 (Especially Heavy)	ISO：Usually in rated load	1.00	—	800
	JIS：Nearly in rated load	—	0.25-0.5	

Table 8
M5（ISO/JIS）

Load Range	Definition	Standard Load Parameter（km）	Daily use time（h）	Total use time（h）
1 (Light)	ISO：Usually in light load	0.125	—	12500
	JIS：Usually in 1/3 of rated load，seldom in rated load	—	4-8	
2 (Middle)	ISO：Usually in light load, sometimes in heavy load	0.25	—	6300/6400
	JIS：Usually in 1/3~2/3 rated load, sometimes in rated capacity	—	2-4	
3 (Heavy)	ISO：Usually in medium load, sometimes in heavy load	0.50	—	3200
	JIS：Usually in more than 2/3 rated capacity，always in rated load	—	1-2	
4 (Especially Heavy)	ISO：Usually in rated load	1.00	—	1600
	JIS：Nearly in rated load	—	0.5-1	

4. Safe Operation

4.1 Instruction

Operating the overload weight may lead to dangerous situation. Before operation, please read all the contents of this chapter and “forbid principal” of chapter 1.2.

Before operating the hoist, please make sure the work place meet the follow requirements:

Ensure the work place could let the hoist work stably.

Ensure with good eye sight, and arrange special person to observe.

4.2 Install and Test

1）Hoist Install and Test

Put the hoist into a reliable frame, connect 380v power plant, then push the up or down button of control pendant, observe the hoist work situation, if the hook move up or down, it means that the connection of electrical wire is correct. If push the control pendant button, the hook does not move, it means the electrical wire phase is connected wrong, then just switch the two phase wire, and the hoist would run correctly.

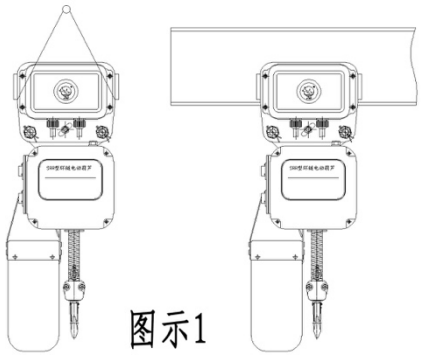

图示1

2）Hoist with Trolley Install and Test

A、Install from the end of rail

◆Ensure the trolley space is suitable for
The rail width, ensure the rail is in horizontality,
Rail inclination need ＜1/200。

◆Under the work condition of Picture 1,installing the hoist from the end of rail.
◆In order to avoid dropping ,make sure to install the buffer limit switch at the both end of rail.

B、Install from the middle of rail

◆If the trolley space is not enough, demount some of the Castle Nut and Adjust Washer (as Picture 2)
◆Install the Trolley on the rail, there should be 3-5mm space Between rail and trolley wheel, or else adjust the space by "Adjust Washer"
◆After the adjustment, install the Castle Nut and Cotter Pin, and bending both sides of the Cotter Pin.

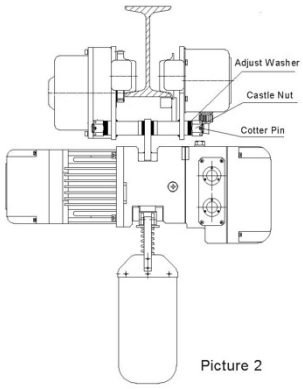

Picture 2

Filling the calcium lubricating oil in the internal gear before using,
After using, filling once per every 3 months.
When using the trolley in the rail, forbidden to have sundry or scar or oil in the rail to influence the the trolley travelling.
The rail for trolley travelling need meet follow requirements: Rail inclination need ＜1/200; If it's circle rail, the radius need be bigger than specified value; it's forbidden to overload for the trolley。

4.3 Load Operation

Operating the hoist at first time (or long time not in use), load test should be done for 15minutes, if test is no problem, then operation the hoist.

5、Inspection

In order to keep the continuous and satisfactory operation, must inspect the hoist regularly change the Broken parts, so that it will not be the potential danger of safe operation.
The inspection interval should be determined according to the use situation and work classification, Also should according to the use environment and the wear condition, the inspection type is separated as daily inspection, periodic inspection.
Inspection type are divided into basic daily inspection and regular inspection.
Basic daily inspection: Before daily use, operator or specialist to visual inspect.
Periodic inspection: Check by the special engineer or technical staff according to the work situation

5.1 Daily Inspection

Item	Method	Judge Standard	Solution
Label Warning Mark	Visual inspection	Stick correctly clean and clearly read	Change
Control Pendant	Visual inspection	No fracture	Change
	Push emergency stop button without load	Stop the hoist, right direction rotate, after push emergency stop button, hoist could run	Change
	Push start button without load	Bottom hook could lift and land	Change or

			Repair
Brake	Lift and land 2 or 3 times without load	Brake effect is good or not	Change or Repair
Up & Down Limit switch	Operate the hook into the limit position without load	When touch the down limit position,the electric motor stop,but could work in the reverse direction	Change or Repair
Load Chain	Visual inspection	Surface with lubricate grease without deformation, without crackle	Clean,lubricate ,change if necessary
Hook	Visual inspection ,Function inspection	Without deformation could move slide and rotate	Change
Position limit spring	Visual inspection	Without deformation	Change

5.2 Periodic Inspection

Item	Method	Judge Standard	Solution
Control Pendant	1、Push button in turn 2、Push emergency stop button	Push button stable, no problem	Repair
Power Voltage	Measure by voltmeter	±10% rated voltage	Check the power voltage and wire
Ground Connection	Check ground connection point	＜0.1 Ohm	Adjust change
Insulation	Measure by ohmmeter	＞1.5 Ohm	Change the defect parts
Hoist frame Nameplate Screw Abnormal situation In operation	Visual inspection Visual inspection Visual inspection Lifting and landing operation with small capacity load	No broken and crack Load capacity should be Clearly visible Screw should not be loosen or missed No abnormal sound in hoist body and motor	Change Change Fasten Repair
Gear oil	Visual inspection	Should be in accordance with use frequency	Add gear oil or change new oil
Brake	Lifting ,landing ,stopping operation with rated Capacity load	Stop when landing ,the down slide speed cannot over 1% of lifting speed	Repair

<table>
<tr><td>Load limiter</td><td>Lifting ground connection load, let the chain slide(less than 5 seconds),then lift with rated capacity load</td><td>Can slide

Can lift rated capacity load</td><td>Adjust and change</td></tr>
<tr><td>Limit switch</td><td>Lift to the limit position with rated capacity load</td><td>Hoist could stop, could move the reverse direction, the spring has certain allowance</td><td>Repair or change</td></tr>
<tr><td>Load chain wear</td><td>Measure
 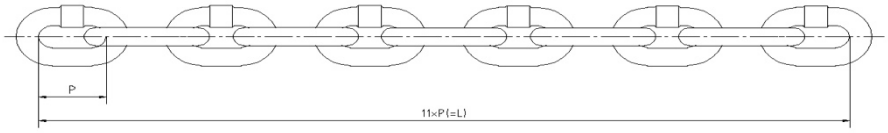

<table>
<tr><td rowspan="2">Capacity（t）</td><td colspan="2">D=(d1+d2)/2</td><td colspan="2">L（mm）</td></tr>
<tr><td>Standard</td><td>Rejected</td><td>Standard</td><td>Rejected</td></tr>
<tr><td>0.25</td><td>5</td><td>≤4.5</td><td>165.8</td><td>≥170.5</td></tr>
<tr><td>0.5</td><td>6.3</td><td>≤5.7</td><td>210</td><td>≥217.36</td></tr>
<tr><td>1-2</td><td>8</td><td>≤7.2</td><td>265.3</td><td>≥274.56</td></tr>
<tr><td>3-32</td><td>11.2</td><td>≤10.1</td><td>375.8</td><td>≥388.96</td></tr>
</table>
Caution：If the load chain is wear out, ensure to check the chain guider.</td><td colspan="2">Change</td></tr>
<tr><td>Load chain deformation</td><td>Visual Inspection</td><td>* No deformation (such as distortion) 。
* without deeper scratch and indent</td><td>Change</td></tr>
<tr><td>Load chain welding scar</td><td>Visual Inspection</td><td>⚠WARNING
without welding scar</td><td>Change</td></tr>
<tr><td>Load chain rust</td><td>Visual Inspection</td><td>⚠WARNING
without obviously rust, lubricate the load chain with lubricating grease</td><td>Change</td></tr>
<tr><td>Hook
 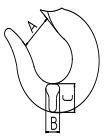
</td><td>Measure Record the below size when you buy A、B、C
<table>
<tr><td colspan="2">Size for first use（mm）</td><td colspan="4">Scrap evaluation criteria</td></tr>
<tr><td colspan="2">A、B、C</td><td colspan="4">More than 5% decrease of measured</td></tr>
<tr><td rowspan="2">Capacity（t）</td><td>A*(mm)</td><td colspan="2">B(mm)</td><td colspan="2">C(mm)</td></tr>
<tr><td>Normal</td><td>Standard</td><td>Reject</td><td>Standard</td><td>Reject</td></tr>
<tr><td>0.25-0.5</td><td>30</td><td>18</td><td>≤17.1</td><td>21</td><td>≤19.95</td></tr>
<tr><td>1</td><td>37</td><td>20</td><td>≤19</td><td>24</td><td>≤22.8</td></tr>
<tr><td>2-3</td><td>45</td><td>26</td><td>≤24.7</td><td>42</td><td>≤39.9</td></tr>
<tr><td>5</td><td>61</td><td>35</td><td>≤33.3</td><td>50</td><td>≤47.5</td></tr>
</table></td><td>更换</td></tr>
</table>

7.5	57	53	≤50.4	67	≤63.7	
10	63	53	≤50.4	77	≤73.15	
15	108	65	≤61.75	100	≤95	
20	108	65	≤61.75	100	≤95	
25	145	80	≤76	132	≤125.4	
32	145	80	≤76	132	≤125.4	

- These values are standard values, because these size cannot be controlled in general tolerance range. The measure value when you buy can be as reference value, Compare the later measure value to the reference value, you could judge the deformation, extension of the hook.

Hook-Deformation	Visual Inspection	Without obvious Deformation and distortion ,hook neck even wear, without deep crackle ,screw and bolt cannot be loose, without welding scar	Change
Hook-Rotation	Visual Inspection	Hook should rotate normally	Change
Hook Safety latch	Visual Inspection, Function Inspection	Hook pin should be in the hook tip Should work normally ⚠WARNING Please do not use the hook without the safety latch	Change

⚠CAUTION The assessment of inspection result should made by specialist so that the hoist can Reach safe work condition after maintained.

⚠WARNING Forbidden to use the parts which is not conform to standard or we do not accept.

6、Maintenance

6.1 General Rules

Wrong maintenance may lead to human being injury or death, only qualified person could maintain the Electric chain hoist, if you do not have qualified person, please contact with our distributor or us.

⚠CAUTION Forbidden to use the hoist which is under maintained

⚠CAUTION After operation, if find abnormal sound, please check all the items as the inspection Demand of chapter 5.

⚠CAUTION Don’t store the hoist with load

⚠CAUTION Clean the dirty of hoist

⚠ CAUTION Store the hoist in place where is clear and dry.

⚠ WARNING Load chain explosion may lead to human being injury or death, please maintain The load chain carefully, including correct operation, good maintenance and Inspection.

6.2 Lubrication

Make sure lubricate the parts as Load chain, Hook neck. Load chain is important parts of hoist, should Use mechanical oil (effect as butter) to lubricate the load chain.

6.3 Common Fault

Malfunctions	Causes	Solution
The hoist refuse to operate under switch on	Wire unconnected or loose result power off	Check and fasten all the wire connection points
	Electrical parts damaged	Replace the damaged parts
After switch off, the load drop while brake	Dust or oil in brake disc	Clean the disc
	Severe abrasion of disc	Replace the disc
Load chain run with abnormal sound	The chain is without lubrication	Lubricate chain by oil or grease
	Load guider broken	Change the load guider
Leakage of electricity	Ground connection is not good	Ensure good ground connection
	High humidity in the air	Don't work in the high humidity environment
	Too much dust on the electrical parts	Keep electrical parts clean
Skid when lifting the load	Load limiter flexible	Screw down the load limiter
Hook extension	Sustain the load with hook tip	Sustain the load in middle of hook
	The chain sling of load is not correct	Select the right chain sling
Inverter alarm	Please read the inverter instruction	

7、Appendix

7.1.1 Explosive drawing

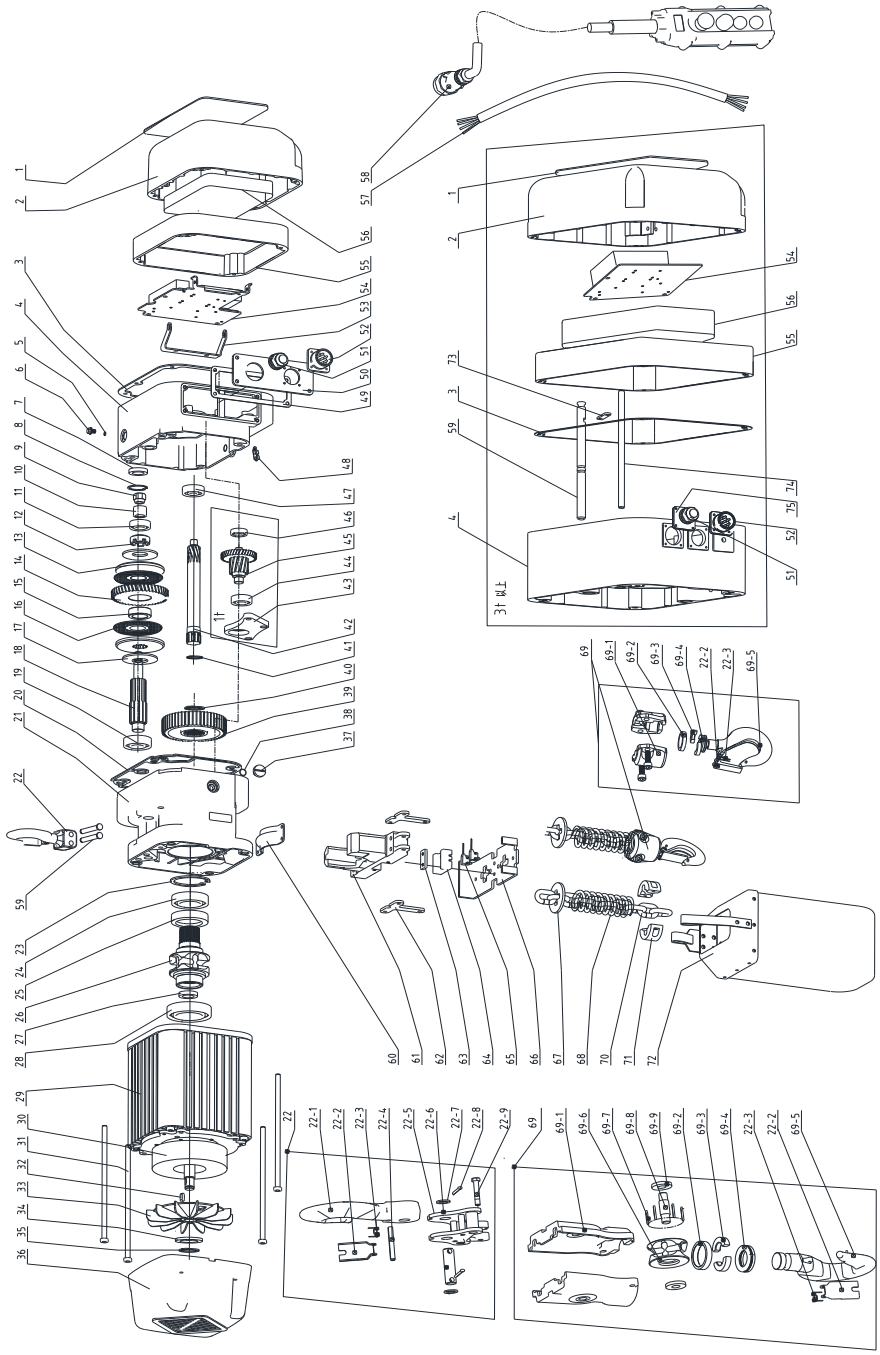

No.	Name	No.	Name	No.	Name
1	Label	25	Lip type sealing ring	57	Power line ASSY
2	Electric control box cover	26	Load sheave	58	Control pendant ASSY
3	Electric control box	27	Lip type sealing ring	59	Hook shaft

	rubber pad				
4	Reducer cover	28	Bearing	60	Chain stopper plate
5	O Type sealing ring	29	Motor	61	Chain guide
6	Outer six corner snail (M14)	30	Brake	62	Fasten plate C
7	Lip type sealing ring	31	Motor screw	63	Micro switch seat fasten plate
8	Hole ring	32	Flat key	64	Micro switch seat
9	Self-locking nut	33	Fan blade	65	Micro switch
10	Spacer B	34	Flat washer	66	Position limit floor boards
11	Bearing	35	Shaft ring	67	Position limit baffle plate
12	Spacer A	36	Motor cover	68	Limited spring
13	Friction pressing piece	37	Plug screw	69-1	Bottom hook shaft
14	Big gear 2	38	O type sealing ring	69-2	Hook ring sleeve
15	Shaft sleeve	39	Spline gear	69-3	Hook ring
16	Friction disc	40	Shaft ring	69-4	Bearing
17	Dish spring	41	Shaft ring	69-5	Bottom hook
18	Small gear shaft 3	42	Small gear shaft 1	69-6	Pulley
19	Bearing	43	Bearing support plate	69-7	Roller needle
20	Gearbox seal	44	Bearing	69-8	Pulley shaft
21	Reducer box	45	Gear shaft 2 ASSY	69-9	Pulley shaft ring
22-1	Top hook	46	Bearing	70	Load chain
22-2	Safety latch	47	Bearing	71	Chain stopper stripper
22-3	Double spring	48	Electric wire board 2	72	Chain bucket set
22-4	Heavy style elastic pin	49	Rubber cushion for wire box	73	Hook shaft stopper stripper
22-5	Top hook shaft	50	Air socket	74	Hanger ring shaft
22-6	Hook shaft	51	Cable grands (waterproof connector)	75	Fasten plate for Cable grands (waterproof connector)
22-7	Hook shaft ring	52	Air socket		
22-8	Cotter pin	53	Electric plate connection shelf		
22-9	Hook pin	54	Electric parts		
23	Hole ring	55	Connect circle		
24	Bearing	56	Additional load		

7.1.2 Trolley Explosive drawing

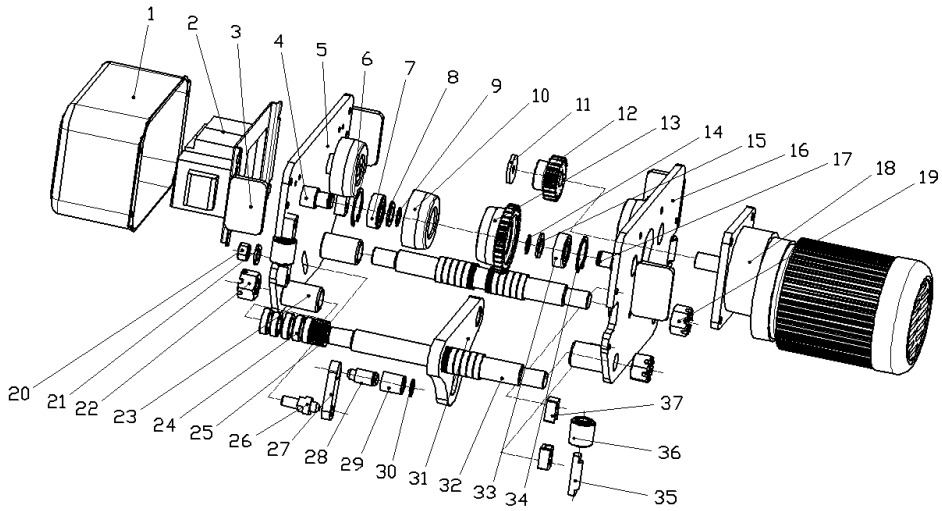

1	Control box	14	Shaft ring	27	Connect block
2	Electrical components	15	Flat washer	28	Rolling sleeve
3	Safety block	16	Left side plate	29	Rolling sleeve shaft
4	Wheel shaft	17	Wheel shaft	30	Shaft ring
5	Right side plate	18	Gearbox	31	Connect plate
6	Hole spring	19	Hexagon socket head screw nut	32	Hanger
7	Rolling bearing	20	Lock nut	33	Rolling bearing
8	Flat washer	21	Flat washer	34	Hole spring
9	Shaft ring	22	Hexagon socket head screw nut	35	Guider wheel shaft
10	Passive wheel	23	Bushing	36	Guider wheel
11	Block	24	Thick washer	37	Fixed block
12	Small gear	25	Thin washer		
13	Active wheel	26	Limit switch pin		

7.2 Electrical diagram

1、Single speed Electrical diagram

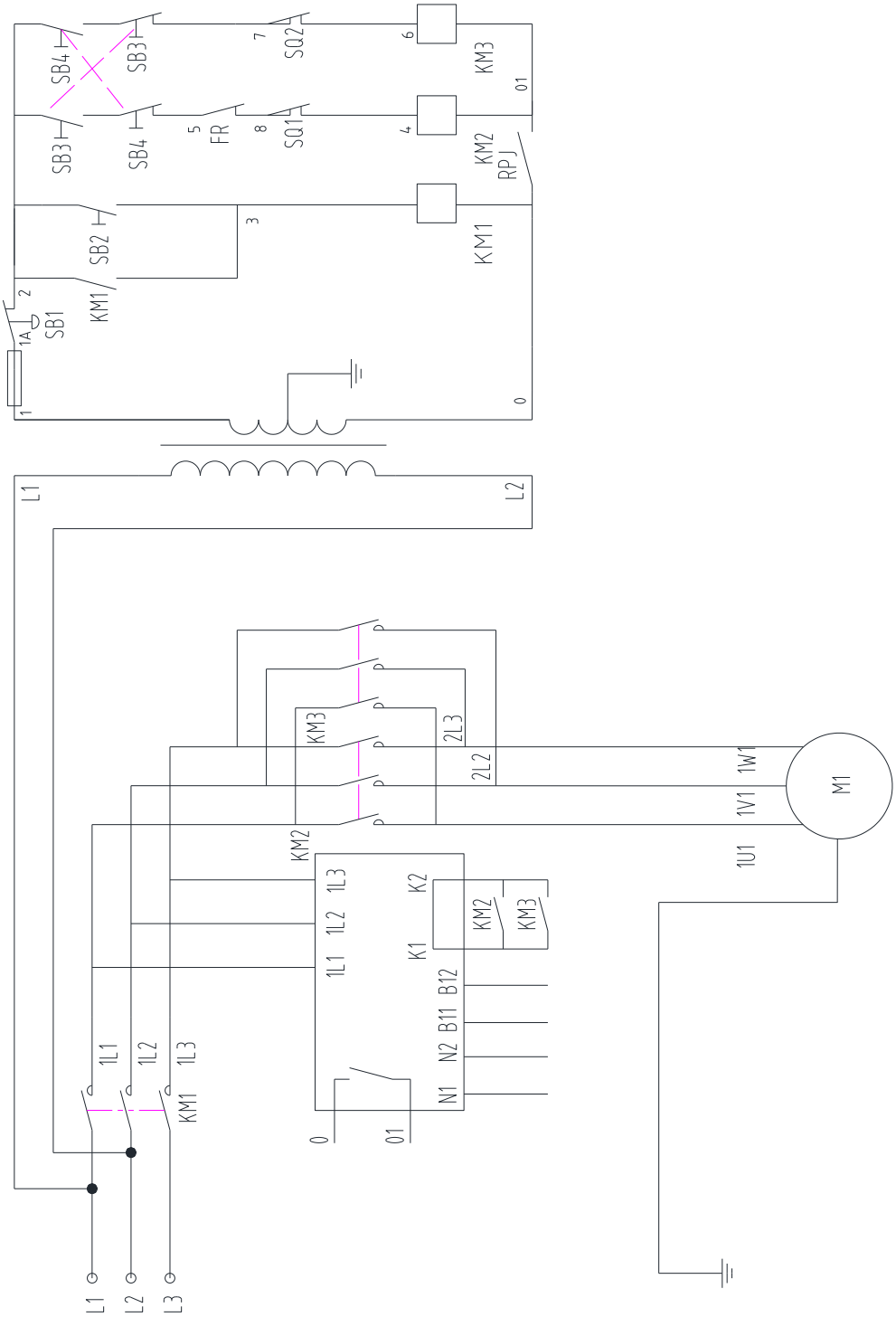

2、 Double speed Electrical diagram

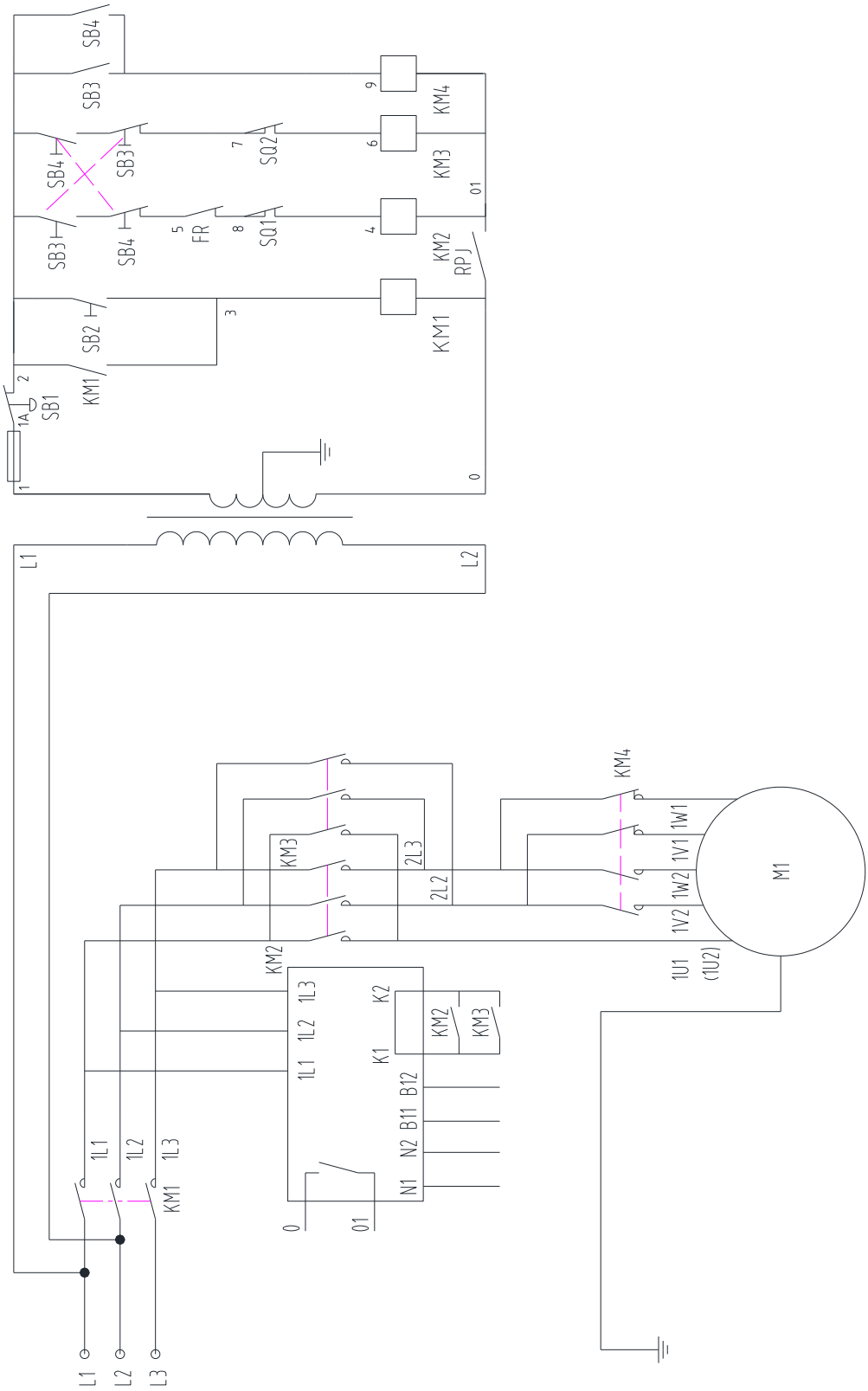

3、Inverter speed Electrical diagram

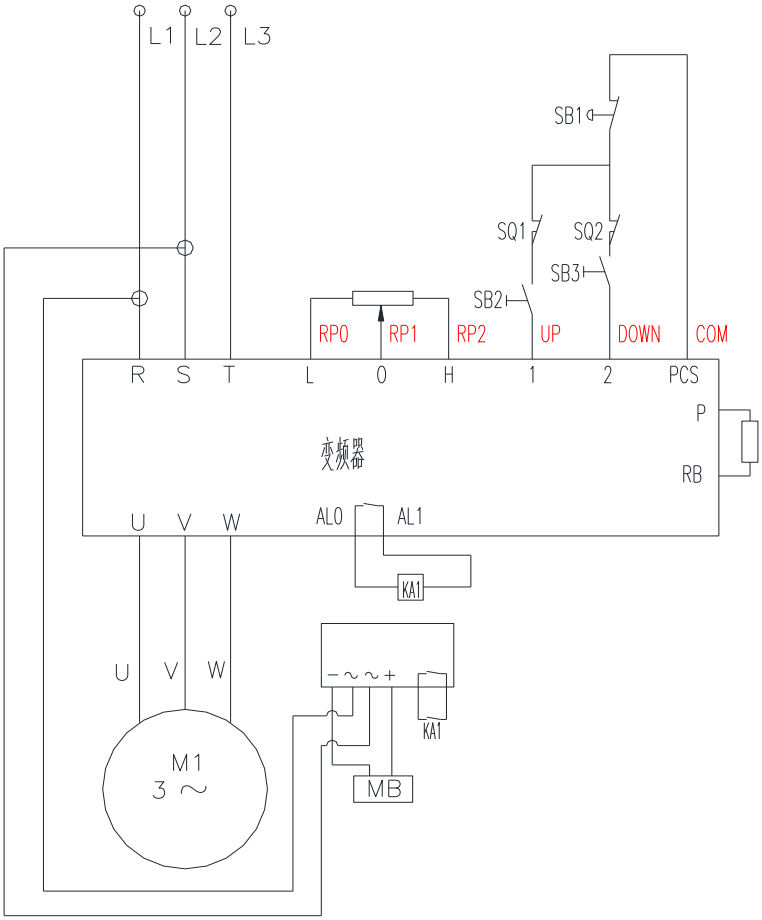

4、 Electrical diagram for Single speed hoist with trolley

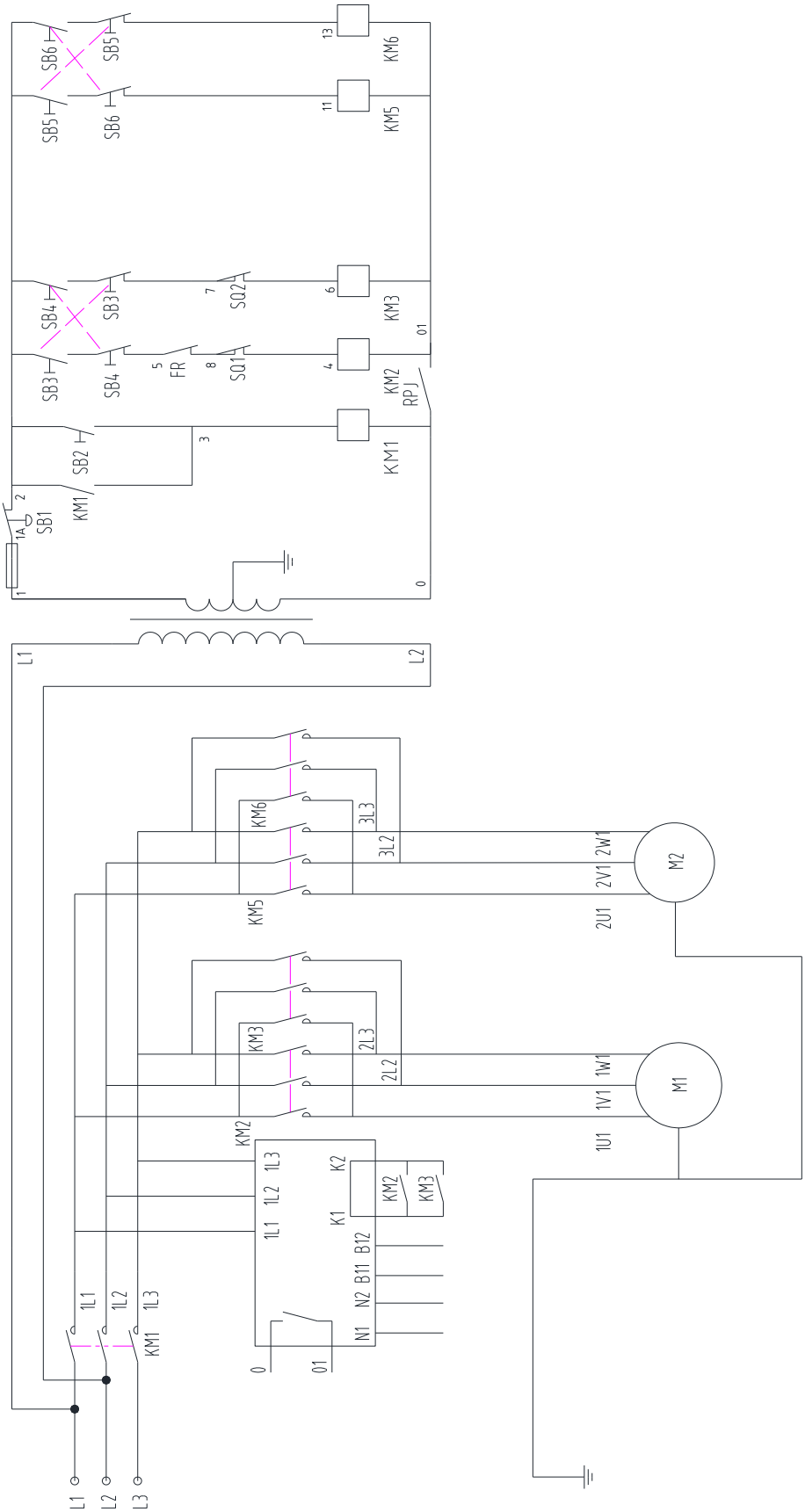

5、Electrical diagram for Double speed hoist with trolley

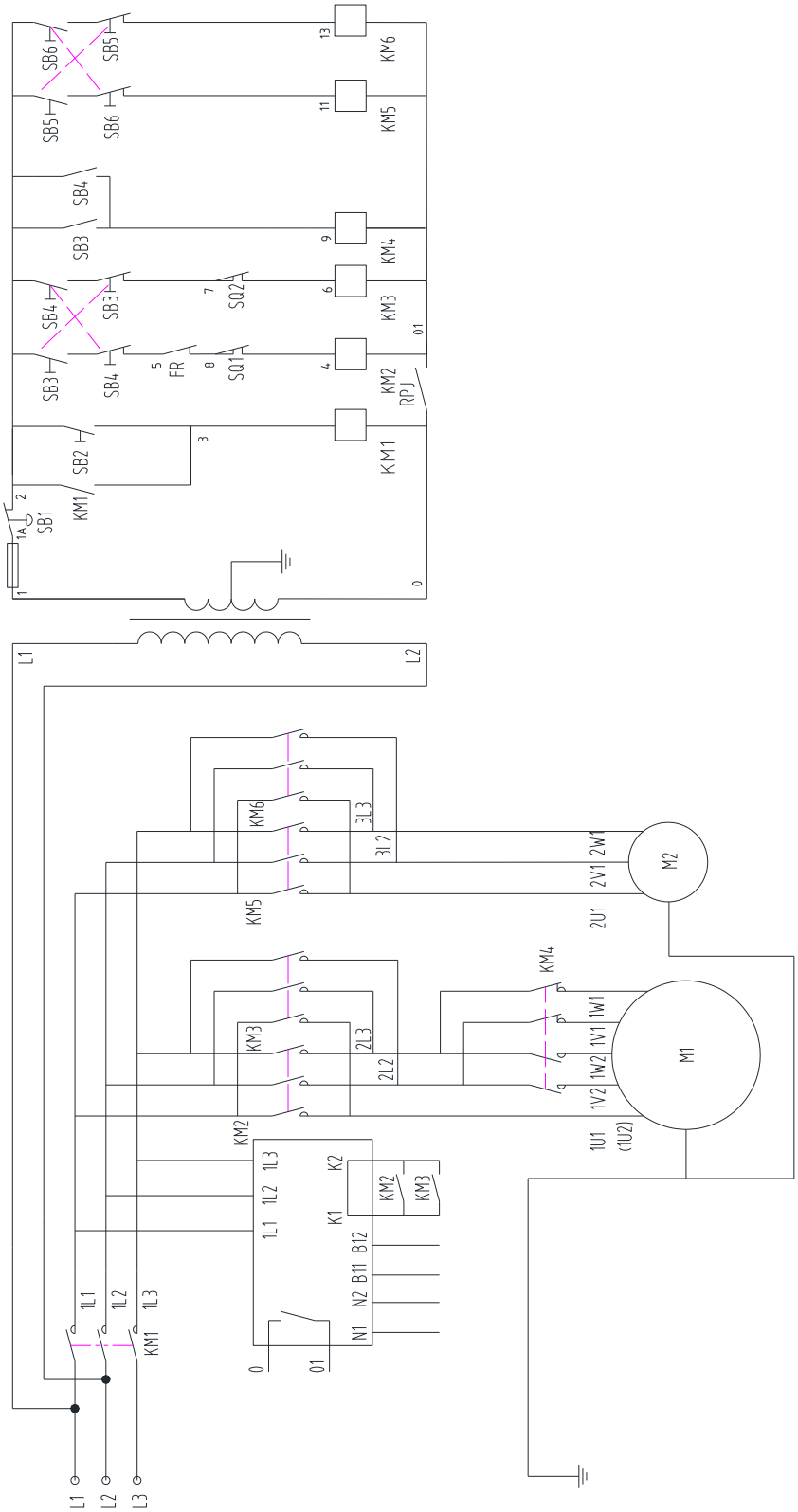

6、Single speed wiring diagram

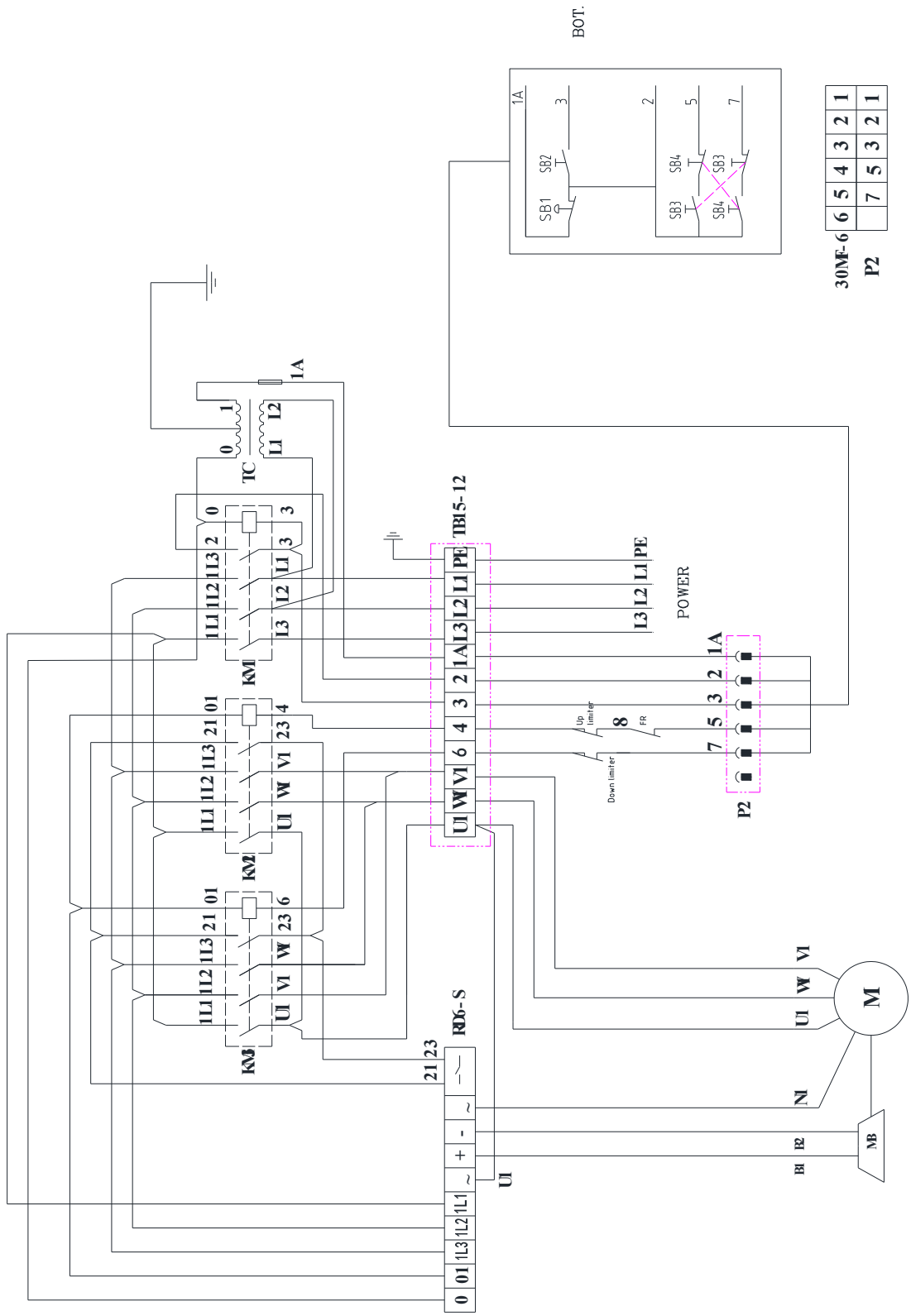

7、 Double speed Wiring diagram

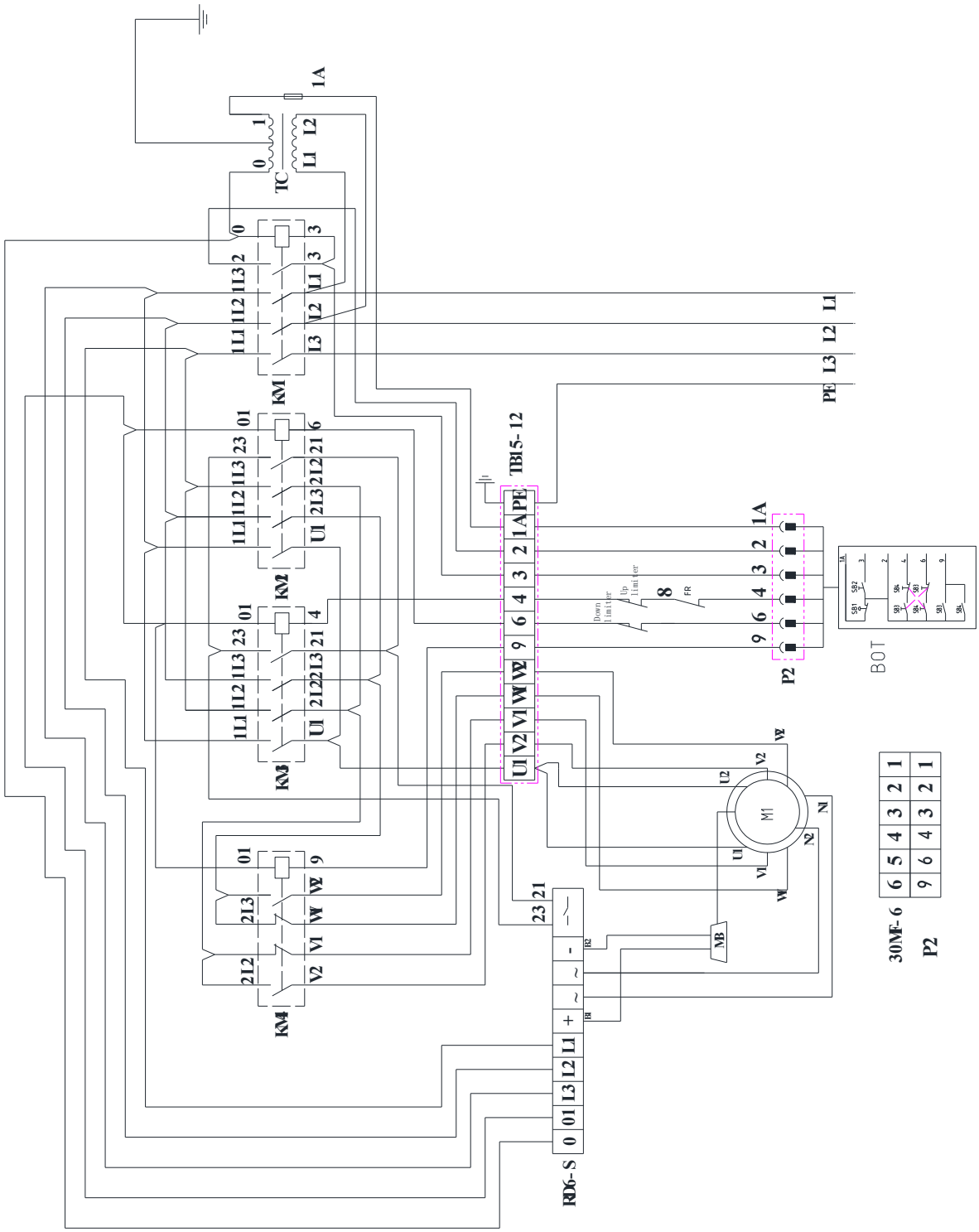

8、 Wiring diagram for Single speed hoist with trolley

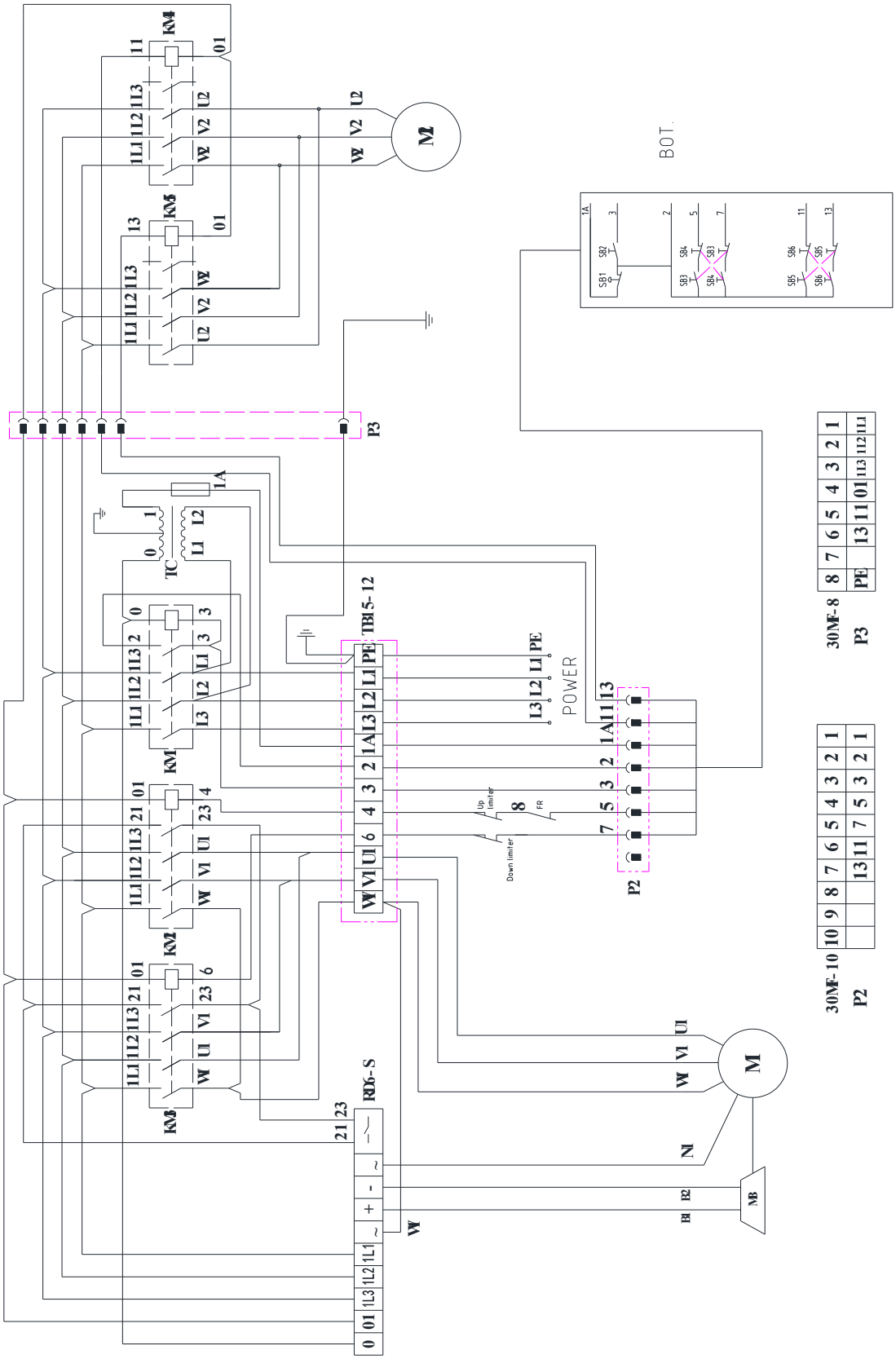

9、 Wiring diagram for Double speed hoist with trolley

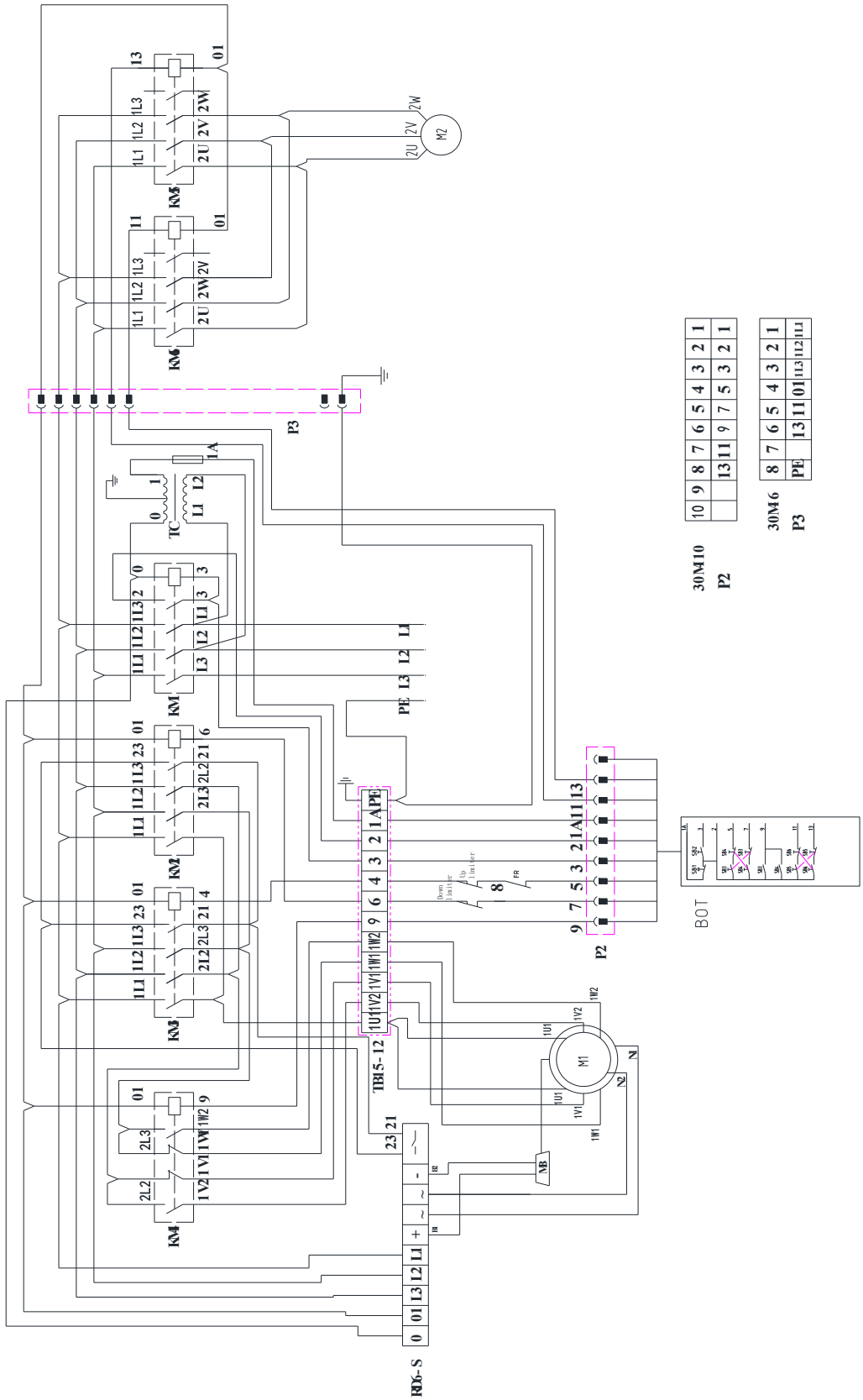
KM5
KM6
KM3
KM4
KM
TC
1A
P3
M2
M1
TB15-12
RD6-S
30M10
P2
30M6
P3
BOT
PE
L1
L2
L3
N